SUNON

SPECIFICATION FOR APPROVAL

CUSTOMER	:	
DESCRIPTION	:	DC BRUSHLESS FAN
DIMENSION	:	92X92X25 mm
SUNON MODEL	:	EF92251B2-10000-F99
SUNON SEQ NO	:	D09050410G-00
REV	:	2
ISSUE DATE	:	2025.10.08
APPROVED BY CUSTOMER	:	

APPROVED BY	Eason Zhu	CHECKED BY	Cindy	DESIGNED BY	Tina

SUNONWEALTH ELECTRIC MACHINE INDUSTRY CO., LTD
NO.30, LN. 296, XINYA RD., QIANZHEN DIST., KAOHSIUNG CITY 806, TAIWAN
TEL: 886-7-8135888 FAX: 886-7-8230505

建準電機工業(股)公司
D.C.C.
2025.10.13
發 行 章

HISTORY

REV	DESCRIPTION	DATE	APPROVED
0	INITIAL VERSION	2022.06.23	
1	REVISE LABEL	2023.02.13	
2	CHANGE DIMENSIONS	2025.10.08	

建準電機工業(股)公司
D.C.C.
2025.10.13
發 行 章

TABLE OF CONTENTS

1. SCOPE 5

2. CHARACTERISTICS 5-6

3. MECHANICAL 6

3.1 BEARING SYSTEM 6
3.2 MATERIALS OF FRAME 6
3.3 MATERIALS OF FAN BLADE 6
3.4 WEIGHT 6

4. ENVIRONMENTAL 6

4.1 OPERATING TEMPERATURE RANGE 6
4.2 STORAGE TEMPERATURE RANGE 6
4.3 OPERATING HUMIDITY RANGE 6
4.4 STORAGE HUMIDITY RANGE 6

5. PROTECTION 6

6. AIR FLOW & STATIC PRESSURE CURVE 7

7. DIMENSIONS 8

8. LABEL 9

9. ROTATION DETECTOR (RD) SIGNAL..... 10

建準電機工業(股)公司
D.C.C.
2025.10.13
發 行 章

I. OTHER SPECIFIED TESTING 11
1 DROP PROOF TEST 11
2 HUMIDITY PROOF TEST 11
3 VIBRATION PROOF TEST 11
4 THERMAL CYCLING TEST 11
5 SHOCK PROOF TEST 11
6 LIFE EXPECTANCY 11
II. CHARACTERISTIC DEFINITION 12
1 INPUT POWER 12
2 RATED CURRENT 12
3 RATED SPEED 12
4 STARTING VOLTAGE 12
5 LOCKED ROTOR CURRENT 12
6 AIR FLOW AND STATIC PRESSURE 12
7 INSULATION RESISTANCE 13
8 DIELECTRIC STRENGTH 13
III. NOTE 14
1 SAFETY 14
2 SPECIFICATION MODIFICATION 15
3 OTHER 15-16
IV. WARRANTY 16
V. FAN INSTALLATION INSTRUCTIONS 17
VI. DECLARATION OF ROHS 18

建準電機工業(股)公司
D.C.C.
2025.10.13
發 行 章

1. SCOPE

THIS SPECIFICATION DEFINES THE ELECTRICAL AND MECHANICAL CHARACTERISTICS OF THE DC BRUSHLESS FAN.

2. CHARACTERISTICS

ITEM	DESCRIPTION
RATED VOLTAGE	12 VDC
OPERATING VOLTAGE	4.5 ~ 13.8 VDC
STARTING VOLTAGE	4.5 VDC (POWER ON/OFF AT 25°C)
RATED CURRENT (AVG.)	0.09 / MAX. 0.104 A
RATED POWER (AVG.)	1.08 / MAX. 1.25 W
SAFETY POWER CONSUMPTION	1.46 W
RATED SPEED	2700 RPM ± 10% IN FREE AIR AT RATED VOLTAGE
AIRFLOW AT ZERO STATIC PRESSURE	NOMINAL 45.0 / MIN. 34.4 CFM
STATIC PRESSURE AT ZERO AIRFLOW	NOMINAL 0.15 / MIN. 0.11 inch-H_2O
ACOUSTICAL NOISE (AVG.)	NOMINAL 32.0 / MAX. 37.9 dB(A)
INSULATION TYPE	UL CLASS A
INSULATION RESISTANCE	10M OHM MIN. AT 500 VDC BETWEEN FRAME AND (+) TERMINAL
DIELECTRIC STRENGTH)	5mA MAX. AT AC 500 VAC 50/60 Hz ONE MINUTE BETWEEN FRAME AND (+) TERMINAL
LIFE EXPECTANCY	70,000 HOURS AT 40 °C WITH 15~65% RH.
DIRECTION OF ROTATION	COUNTER-CLOCKWISE FROM BLADE SIDE

THE MAXIMUM VALUE OF THE RATED CURRENT STANDS FOR THE UPPER LIMIT OF THE AVERAGE CURRENT MEASURED IN FREE AIR AND DOES NOT REPRESENT THE PEAK VALUE.
THE PEAK VALUE SHOULD BE MEASURED USING AN OSCILLOSCOPE.

建準電機工業(股)公司
D.C.C.
2025.10.13
發 行 章

NOTE: ACOUSTICAL NOISE

MEASURED IN A SEMI-ANECHOIC CHAMBER WITH BACKGROUND NOISE LEVEL BELOW 15dB(A).

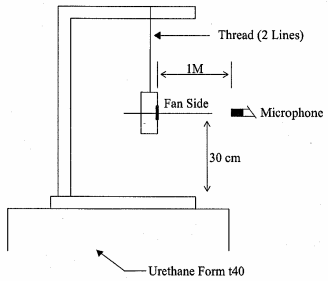

1 METER FROM MICROPHONE TO FAN INTAKE

THE FAN IS RUNNING IN FREE AIR UNDER SHAFT HORIZONTAL CONDITION WITH THE MICROPHONE AT DISTANCE OF ONE METER FROM THE FAN INTAKE.

3. MECHANICAL

3.1	BEARING SYSTEM	:	PRECISE BALL BEARING SYSTEM
3.2	MATERIALS OF FRAME	:	THERMOPLASTIC OF UL 94V-0
3.3	MATERIALS OF FAN BLADE	:	THERMOPLASTIC OF UL 94V-0
3.4	WEIGHT	:	92 GRAMS

4. ENVIRONMENTAL

4.1	OPERATING TEMPERATURE RANGE	:	-10 TO + 70 DEGREE C
4.2	STORAGE TEMPERATURE RANGE	:	-40 TO + 70 DEGREE C
4.3	OPERATING HUMIDITY RANGE	:	5 TO 90% RH
4.4	STORAGE HUMIDITY RANGE	:	5 TO 95% RH

5. PROTECTION

☑AUTOMATIC RESTART

NOTE: THE MOTOR WILL SHUT DOWN WHEN ROTOR WAS LOCKED, THEN AUTO RESTART WITHIN 10 SECONDS.

☑POLARITY PROTECTION

建準電機工業(股)公司
D.C.C.
2025.10.13
發 行 章

6. AIR FLOW & STATIC PRESSURE CURVE

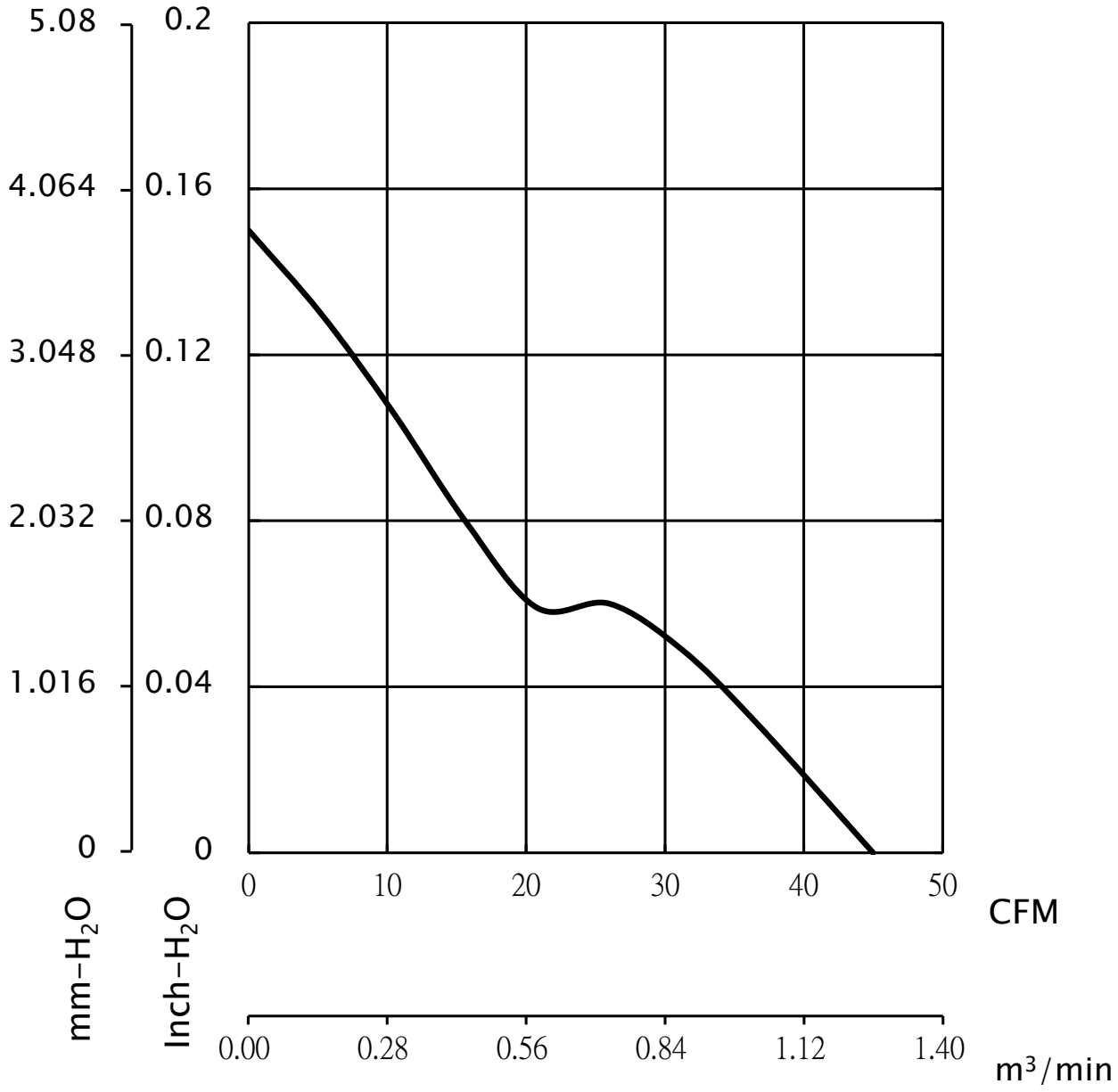

建準電機工業(股)公司
D.C.C.
2025.10.13
發 行 章

7. DIMENSIONS

SCREW TYPE (PAN HEAD)	TORQUE	SCREW SPEC	
		SIZE	STANDARD
MACHINE SCREW	3～4 Kgf-cm	M4.0	JIS B1111-1974
Self-tapping screw	<6 Kgf-cm	ϕ5.0	JIS B1122 Type 2

NOTE: SUNON RECOMMENDS THE SCREW AND TORQUE AS ABOVE. PLEASE CONTACT SUNON, IF ANY NEW REQUIREMENT IS REQUESTED.

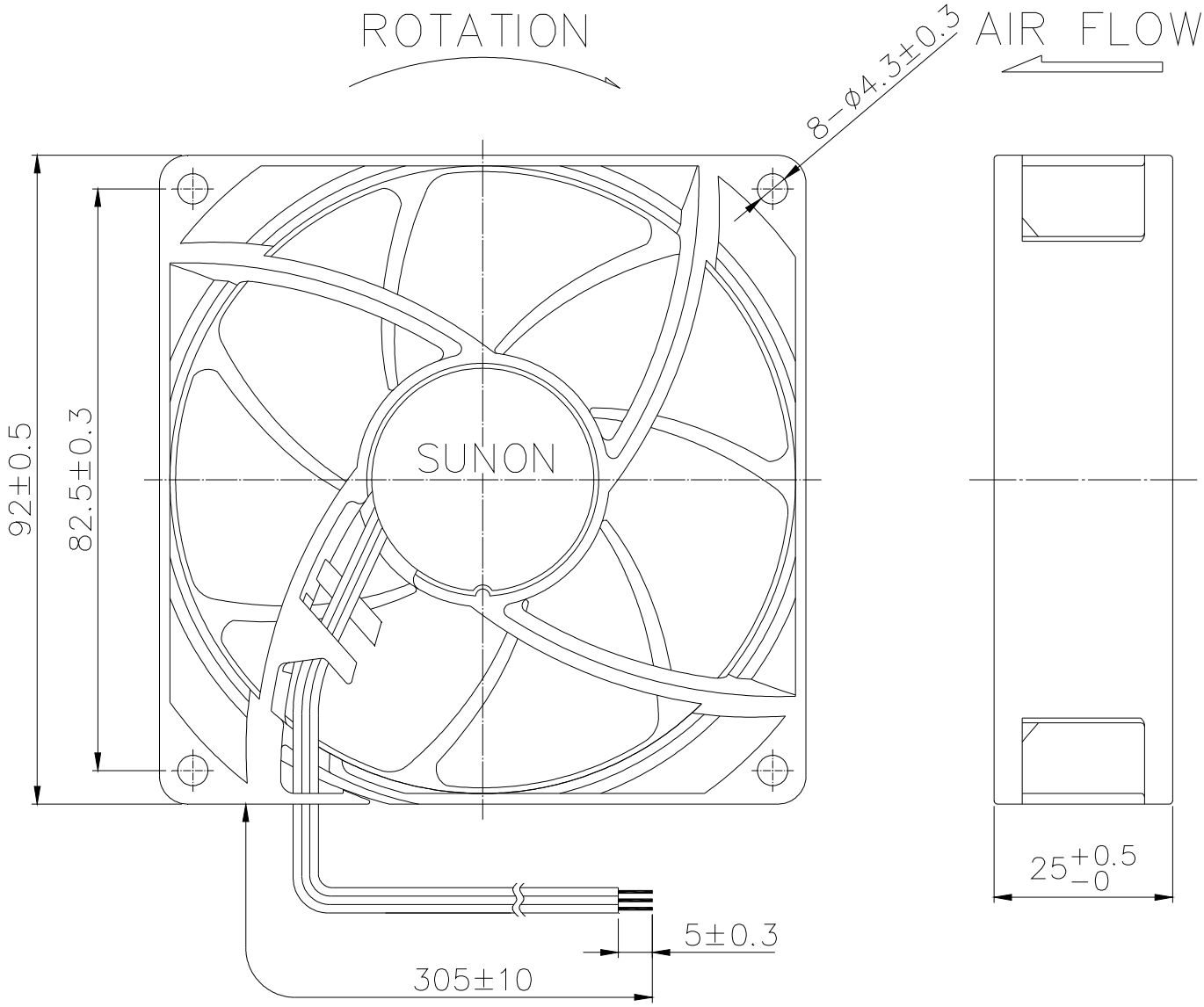

1.LEAD WIRE:UL1007 #24AWG
RED WIRE--------(+)
BLACK WIRE------(-)
WHITE WIRE---(RD)
2.FRAME TYPE:FLANGE

UNIT:mm

建準電機工業(股)公司
D.C.C.
2025.10.13
發 行 章

8. LABEL

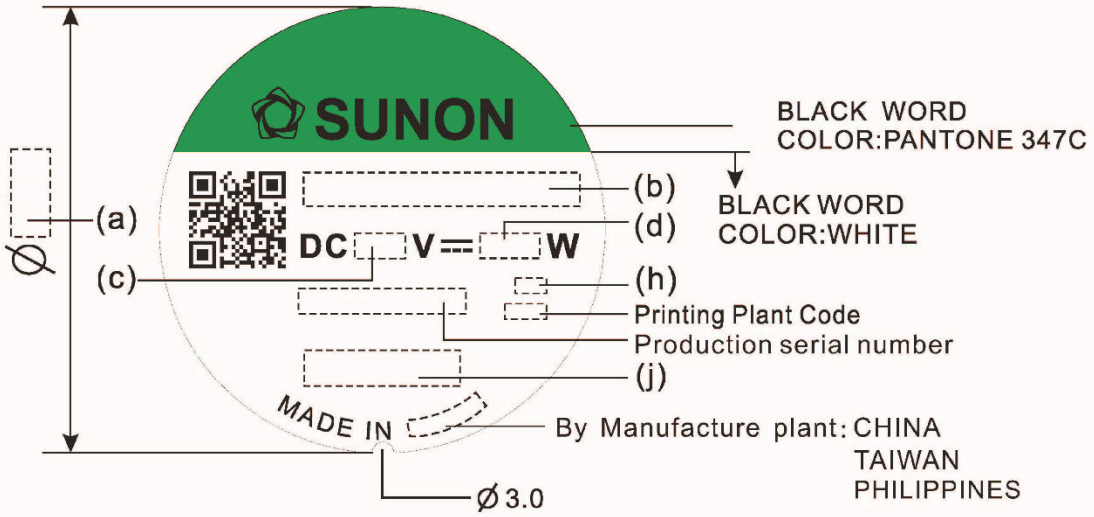

(a)Dimension	(b)Model Name	(c)Voltage	(d)Power Consumption	(h)Protection
32	EF92251B2-10000-F99	12	1.46	EP

(j)Safety
CE/TUV(ID20)/UL+CUR

1.English Font: Swis721 Series & Switzerland Narrow,Chinses Font: 超研澤中明簡體.

2.Safety(CE/TUV(ID20)/UL+CUR)

建準電機工業(股)公司
D.C.C.
2025.10.13
發 行 章

9. ROTATION DETECTOR (RD) SIGNAL

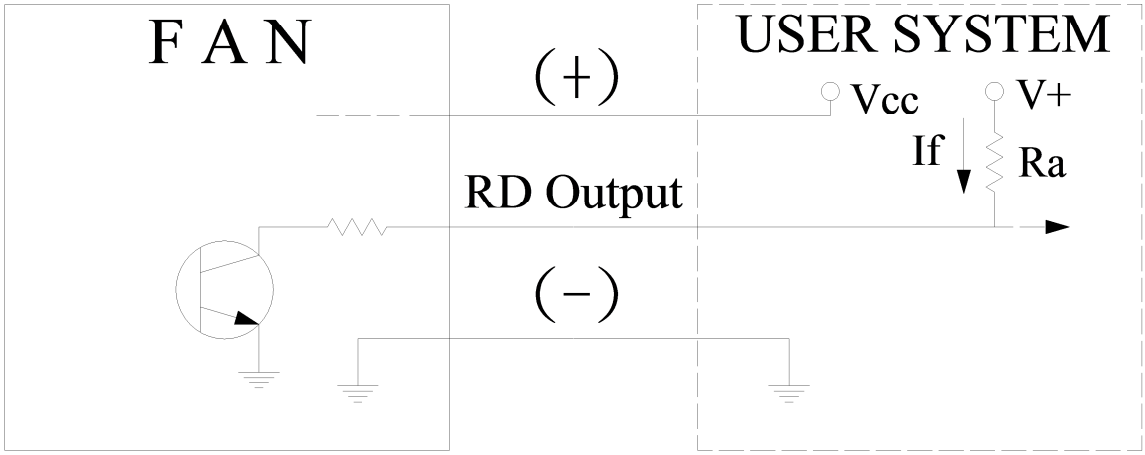

***Ra ≧ V^+ / If (max)**

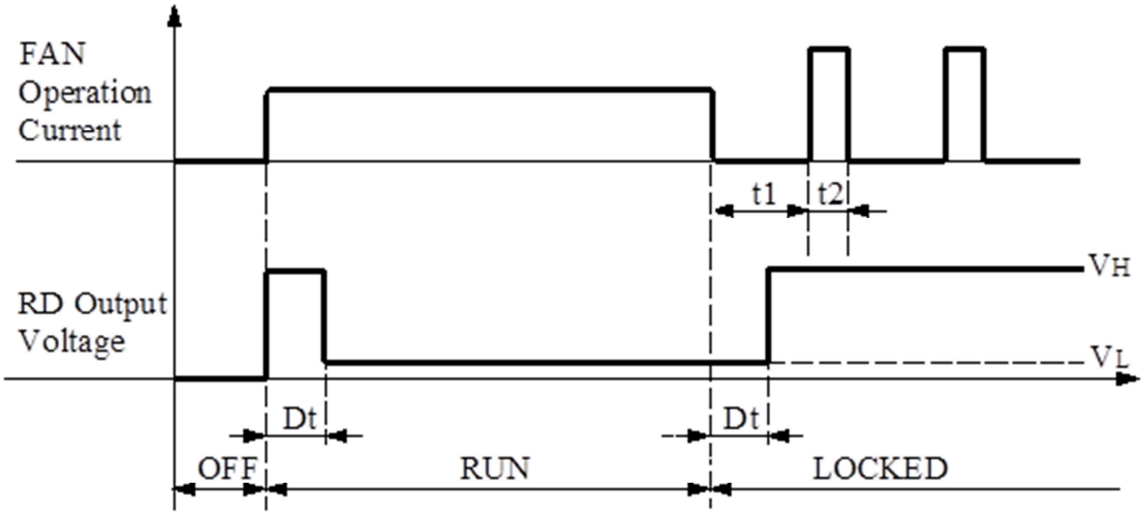

★Electrical Characteristics ：(at Ta = 25℃ ，Vcc =Rated Volt.)

Parameter	Ratings			Unit
	min.	typ.	max.	
RD Supply Voltage(V+)	-	-	13.8	Voltage
RD Output Current (If)	-	-	5	mA
RD Output (VL)	-	-	0.5	Voltage
RD Output (VH)	-	-	V+	Voltage
RD Output Delay Time (Dt)	-	-	1	Second
Ratio(=t1/t2)	-	7.1	-	

建準電機工業(股)公司
D.C.C.
2025.10.13
發 行 章

I. OTHER SPECIFIED TESTING

The following is a general description of certain tests that are performed on representative SUNON fans. Nothing in this document is intended to suggest that these tests are performed on every model of SUNON fan. Moreover, the descriptions that follow each test are meant only to provide a general explanation of each test. If you would like a more detailed explanation as to any test identified in this section, SUNON can provide such an explanation upon request.

1. DROP PROOF TEST

   Fans are packaged in a standard size shipping box and are dropped to the ground from certain heights and angles depending on the weight of the particular box.

2. HUMIDITY PROOF TEST

   The fan is operated for 96 continuous hours in an environment with humidity of 90% to 95% RH at 60°C ± 2°C.

3. VIBRATION PROOF TEST

   Vibration with an amplitude 2mm and a frequency of 5-55-5hz is applied in all 3 directions (X,Y,Z), in cycles of 1 hour each, for a total vibration time of 3hours.

4. THERMAL CYCLING TEST

   The fan is operated in a testing chamber for 50 cycles. In each cycle, the temperature is gradually increased from -10°C to 70°C for 90 minutes, and subsequently operated at 70°C for 120 minutes. The temperature is then gradually decreased from 70°C to -10°C for 90 minutes, and subsequently operated at -10°C for 120 minutes.

5. SHOCK PROOF TEST

   100G of force is applied in the 3 directions (X,Y, and Z) for 2 milliseconds each.

6. LIFE EXPECTANCY

   The “Life Expectancy” of SUNON fans is determined in SUNON’s reliability test laboratory by using temperature chambers. The “Life Expectancy” of this fan has not been evaluated for use in combination with any end application. Therefore, the Life Expectancy Test Reports (L10 and MTTF Report) that relate to this fan are only for reference.

建準電機工業(股)公司
D.C.C.
2025.10.13
發 行 章

II. CHARACTERISTIC DEFINITION

The following is a general description of certain tests that are performed on representative SUNON fans in order to determine the specifications of the fan. Nothing in this document is intended to suggest that these tests are performed on every model of SUNON fan. Moreover, the descriptions that follow each test are meant only to provide a general explanation of each test. If you would like a more detailed explanation as to any test identified in this Section, SUNON can provide such an explanation upon request.

1. INPUT POWER

   Measured after continuous 10 minutes operation at rated voltage in clean air (STATIC PRESSURE=0), and at ambient temperature of 25 degrees C under shaft horizontal condition.

2. RATED CURRENT

   Measured after continuous 10 minutes operation at rated voltage in clean air (STATIC PRESSURE=0), and at ambient temperature of 25 degrees C under shaft horizontal condition.

3. RATED SPEED

   Measured after continuous 10 minutes operation at rated voltage in clean air (STATIC PRESSURE=0), and at ambient temperature of 25 degrees C under shaft horizontal condition.

4. STARTING VOLTAGE

   Measured the voltage which enables to start the fan in the clean air (static pressure = 0)by switching on at the voltage under shaft horizontal condition. It is not at continuously increasing voltage adjustment.

5. LOCKED ROTOR CURRENT

   Measured immediately after the fan blade is locked.

6. AIR FLOW AND STATIC PRESSURE

   The performance specification of air flow and static pressure shown in this specification for approval is measured using the exhaust method. A double chamber is used in accordance with AMCA 210 standard or DIN 24163 specification . The values are recorded when the fan speed has stabilized at rated voltage.

建準電機工業(股)公司
D.C.C.
2025.10.13
發 行 章

7. INSULATION RESISTANCE

7.1. PLASTIC FRAME:

(1) Measured between internal stator and lead wire(+).

(2) Measured between frame and lead wire(+).

7.2. ALUMINIUM FRAME:

Measured between internal stator and lead wire(+).

8. DIELECTRIC STRENGTH

Measure between frame and lead wire(+).

建準電機工業(股)公司
D.C.C.
2025.10.13
發 行 章

III. NOTE

1. SAFETY

1.1. DO NOT use or operate this fan in excess of the limitations set forth in this specification. SUNON is not responsible for the non-performance of this fan and/or any damages resulting from its use, if it is not used or operated in accordance with the specifications.

1.2. SUNON recommends adding a protection circuit to the product or application in which this fan is installed, such as a thermo-fuse, or current-fuse or thermo-protector. The failure to use such a device may result in smoke, fire, electric shock by insulation degradation in cases of motor lead short circuit, overload, or over voltage, and/or other failure.

1.3. SUNON recommends installing a protection device to the product or application in which this fan is installed if there is a possibility of reverse-connection between VDC (+) and GND (-). The failure to install such a device may result in smoke, fire, and/or destruction, although these conditions may not manifest immediately.

1.4. This fan must be installed and used in compliance with all applicable safety standards and regulations.

1.5. Use proper care when handling and/or installing this fan. Improper handling or installation of this fan may cause damage that could result in unsafe conditions.

1.6. Use proper care during installation and/or wiring. Failure to use proper care may cause damage to certain components of the fan including, but not limited to, the coil and lead wires, which could result in smoke and/or fire.

1.7. DO NOT use power or ground PWM to control the fan speed. If the fan speed needs to be adjusted, please contact SUNON to customize the product design for your application.

1.8. For critical or extreme environments, including non stop operation, please contact SUNON and we will gladly provide assistance with your product selection to ensure an appropriate cooling product for your application.

建準電機工業(股)公司
D.C.C.
2025.10.13
發 行 章

2. SPECIFICATION MODIFICATION

2.1. SUNON offers engineering assistance on fan installation and cooling system design.

2.2. All changes, modifications and/or revisions to the specifications, if any,are incorporated in the attached specifications.

2.3. No changes, modifications and/or revisions to these specifications are effective absent agreement, by both SUNON and the customer, in writing.

2.4. This fan will be shipped in accordance with the attached specification unless SUNON and the customer have agreed otherwise, in writing, as specified in Paragraph 3, above.

3 OTHER

3.1. When building your device, please examine thoroughly any variation of EMC, temperature rise, life data, quality, etc. of this product by shock/drop/vibration testing, etc. If there are any problems or accidents in connection with this product, it should be mutually discussed and examined.

3.2. Use proper care when handling this fan. Components such as fan holders or bearings may be damaged, if touched with fingers or other objects. Additionally, static electricity (ESD) may damage the internal circuits of the fan.

3.3. DO NOT operate this fan in proximity to hazardous materials such as organic silicon, cyanogens, formalin, phenol, or corrosive gas environments including, but not limited to, H_2S, SO_2, NO_2, or Cl_2.

3.4. SUNON recommends that you protect this fan from exposure to outside elements such as dust, condensation, humidity or insects. Exposure of this fan to outside elements such as dust, condensation, humidity or insects may affect its performance and may cause safety hazards. SUNON does not warrant against damage to the product caused by outside elements.
Re: The term can be excluded, if the fan has been with IP design and meets customer's IP requirement.

建準電機工業(股)公司
D.C.C.
2025.10.13
發 行 章

3.5. This fan must be installed properly and securely. Improper mounting may cause harsh resonance, vibration, and noise.

3.6. Fan guards may prevent injury during handling or installation of the fan and are available for sale with this fan.

3.7. Unless otherwise noted, all testing of this fan is conducted at 25°C ambient temperature and sixty-five percent (65%) relative humidity.

3.8. DO NOT store this fan in an environment with high humidity. This fan must be stored in accordance with the attached specifications regarding storage temperature. If this fan is stored for more than 6 months, SUNON recommends functional testing before using.

3.9. SUNON reserves the right to use components from multiple sources at its discretion. The use of components from other sources will not affect the specifications as described herein.

3.10. The “Life Expectancy” of this fan has not been evaluated for use in combination with any end application. Therefore, the Life Expectancy Test Reports (L10 and MTTF Report) that relate to this fan are only for reference.

3.11. Be certain to connect an "4.7μF or greater" capacitor to the fan externally when the application calls for using multiple fans in parallel, to avoid any unstable power.

IV. WARRANTY

This fan is warranted against all defects which are proved to be fault in our workmanship and material for one year from the date of our delivery. The sole responsibility under the warranty shall be limited to the repair of the fan or the replacement thereof, at SUNON’s sole discretion. SUNON will not be responsible for the failures of its fans due to improper handing, misuse or the failure to follow specifications or instructions for use. In the event of warranty claim, the customer shall immediately notify SUNON for verification. SUNON will not be responsible for any consequential damage to the customer’s equipment as a result of any fans proven to be defective.

建準電機工業(股)公司
D.C.C.
2025.10.13
發 行 章

V. FAN INSTALLATION INSTRUCTIONS

1. FAN INSTALLATION USING MACHINE SCREW

1.1. For flange-type fans, secure the screws on the same inlet/outlet side of the frame as shown in Figure 1.
1.2. For rib-type fans, secure the screws through the frame as shown in Figure 2.
1.3. Refer to Dimensions for the torque recommendation.

2. FAN INSTALLATION USING SELF-TAPPING SCREW

2.1. To prevent deformation or split after installation, please use the self-tapping screw recommended by SUNON and refer to our company's torque recommendation before use.
2.2. Refer to Dimensions for the torque recommendation.

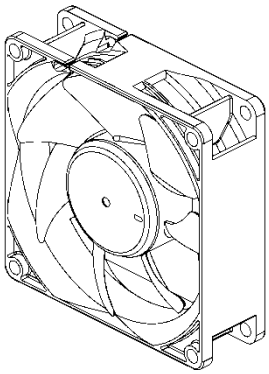

● FLANGE TYPE

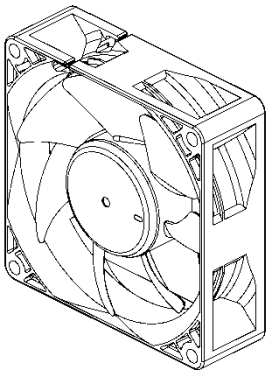

● RIB TYPE

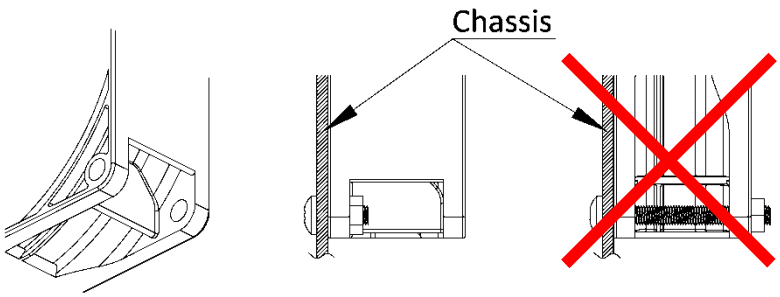

● FLANGE TYPE FIGURE 1

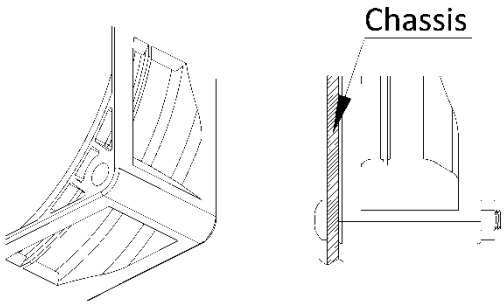

● RIB TYPE FIGURE 2

建準電機工業(股)公司
D.C.C.
2025.10.13
發 行 章

Declaration of RoHS

SUNON (including Sunonwealth Electric Machine Industry Co., Ltd., SUNON Electronics (Kun Shan) Co., Ltd., SUNON Electronics (Beihai) Co.,Ltd., Lizhun Electronics (Beihai) Co., Ltd. and SUNON Electronics (Philippines) Co., Ltd.) guarantee that the products made by SUNON comply with the requirements of the Restriction of Hazardous Substances in Electrical and Electronic Equipment (RoHS) Directive (EU) 2015/863 amending 2011/65/EU the Annex II , the use of the restricted substances in homogeneous materials is in accordance with the following limit values:

No	Substance	Limit Value
1	Cadmium (Cd)	<100 ppm
2	Hexavalent Chromium (CrVI)	<1000 ppm
3	Lead (Pb) *	<1000 ppm
4	Mercury (Hg)	<1000 ppm
5	Polybrominated Biphenyls(PBBs)	<1000 ppm
6	Polybrominateddiphenyl ethers (PBDEs)	<1000 ppm
7	Di-butyl Phthalate(DBP)	<1000 ppm
8	Benzyl butyl Phthalate(BBP)	<1000 ppm
9	Di-ethylhexyl Phthalate (DEHP)	<1000 ppm
10	Di-isobutyl Phthalate (DIBP)	<1000 ppm

* Note: Lead content in homogeneous materials may be greater than 1000 ppm, such as steel alloys, copper alloys, high melting point solder, and ceramics and glass, which applies to exemption 6(a), 6(c), 7(a) and 7(c)-I respectively.

*This product complies with the RoHS and REACH Compliance Statement published on the SUNON official website.

建準電機工業(股)公司
D.C.C.
2025.10.13
發 行 章